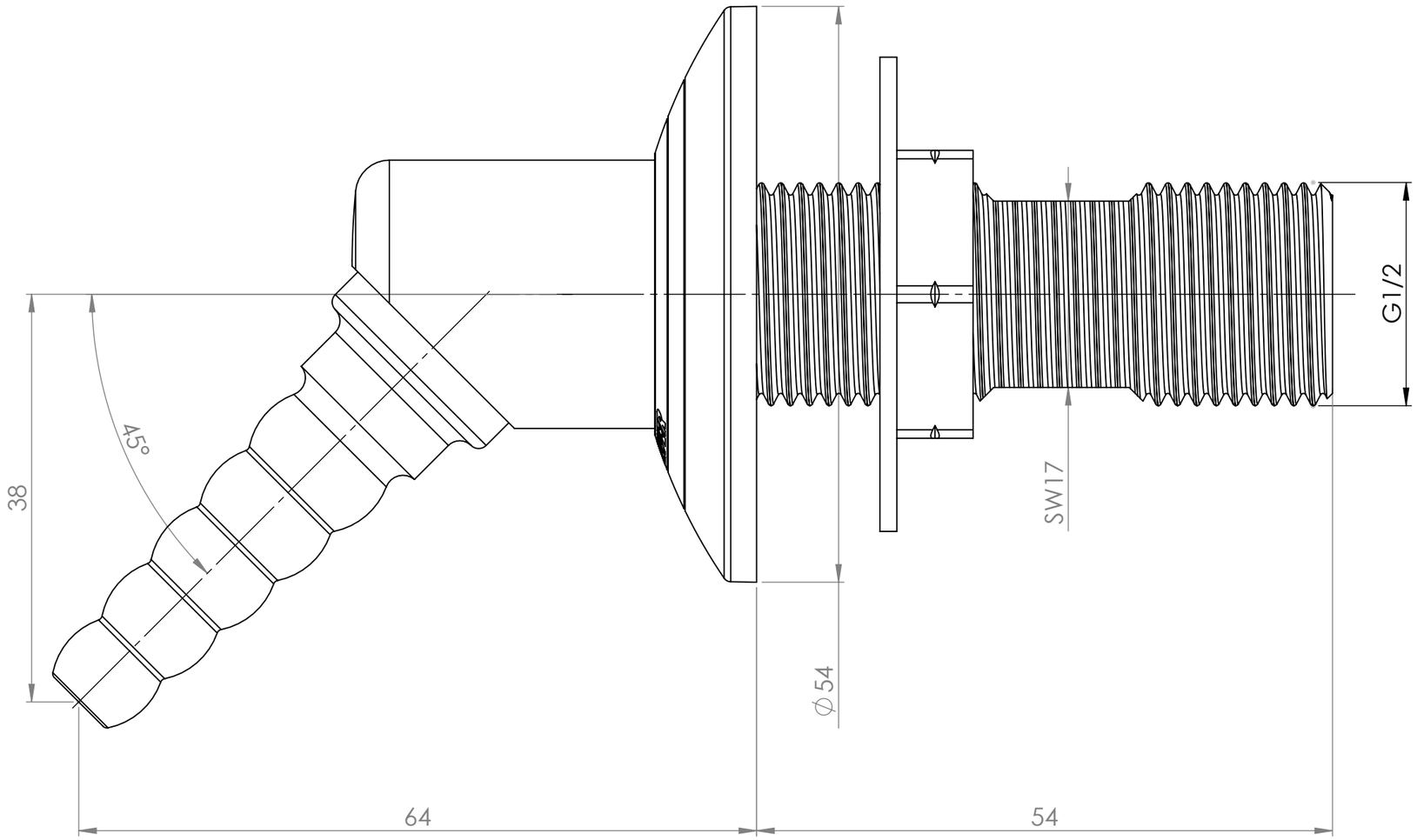


| Media | MM |
|---|---|
| Potable water, hot | 02 |
| Potable water, cold | 03 |
| Spring water | 04 |
| Non-potable water, hot | 05 |
| Non-potable water, cold | 06 |
| Coolant water, return | 11 |
| Coolant water, feed | 12 |
| Natural gas | 20 |
| Liquefied petroleum gas | 21 |
| Compressed air | 38 |
| Nitorgen | 35 |
| Carbon dioxide | 40 |
| Argon | 47 |
| Helium | 48 |
| Low vacuum | 59 |

Max. panel thickness: 33mm
Panel drilling: ∅21+1 mm

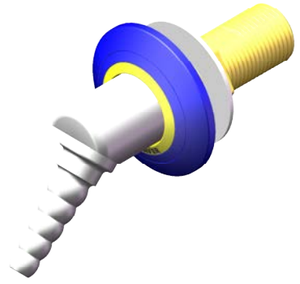

UNLESS OTHERWISE SPECIFIED, ALL DIMENSIONS IN MM

| INDEX | CHANGE | DATE | NAME |
|---|---|---|---|

WEIGHT: 278.897g

| | DATE | NAME |
|---|---|---|
| CREATED | 12.05.2023 | D.kheradvar |
| CHECKED | 12.05.2023 | C. Vowinkel |
| RELEASED | 12.05.2023 | C. Vowinkel |

ILA

THIS DRAWING IS PROPERTY OF ILA GMBH, IT CAN NOT BE PUBLISHED OR COMMUNICATED WITHOUT CONSENT OF ILA GMBH

DESCRIPTION

Panel mounted 45° fume hood outlet in brass for water, burning gases, 2.0 technical gases and vacuum. Inlet connection: 54mm shank with G½ male thread. Fixed serrated brass hose nozzle. Media indication according to EN 13792. RAL 7035 powder coated finish.

DRWAING NUMBER. 98.3300.16MM.0050 A3

SCALE: 2:1 PAGE: 1 / 1